Prolific®

29" undermount single-bowl workstation kitchen sink

K-23651

Features

- Single bowl.
- 10" (254 mm) depth provides generous workspace.
- Includes bamboo cutting board, two multipurpose grated racks, colander, and wash bin.
- Three graduated ledges in basin allow you to place accessories at your preferred height.
- Accessories stack and slide on ledges for a custom arrangement.
- Medium size cutting board (10"x16") included with sink - covers 1/3 of sink.
- Beveled cone-shape basin slopes into drain, easily disposing debris.
- Beveled cone-shape basin slopes into drain, easily disposing debris.
- Sink drain with strainer sold separately.

Material

- Fabricated 18-gauge stainless steel.

Installation

- Undermount.
- Minimum base cabinet width: 30"-33" (30" may require cabinet modifications).

Recommended Products/Accessories

K-8801 Sink drain and strainer with tailpiece
K-8799 Sink drain and strainer basket
K-23726 Drain treatment
K-23729 Stainless steel cleaner
K-11352 Disposal Flange with Stopper
K-23680 Large Bamboo Cutting Board

Included Components

Additional Components:

5541
5542
5544
Installation hardware

Codes/Standards

ASME A112.19.3/CSA B45.4

KOHLER® Stainless Steel Sinks Lifetime Limited Warranty

See website for detailed warranty information.

Prolific®

29" undermount single-bowl workstation kitchen sink

K-23651

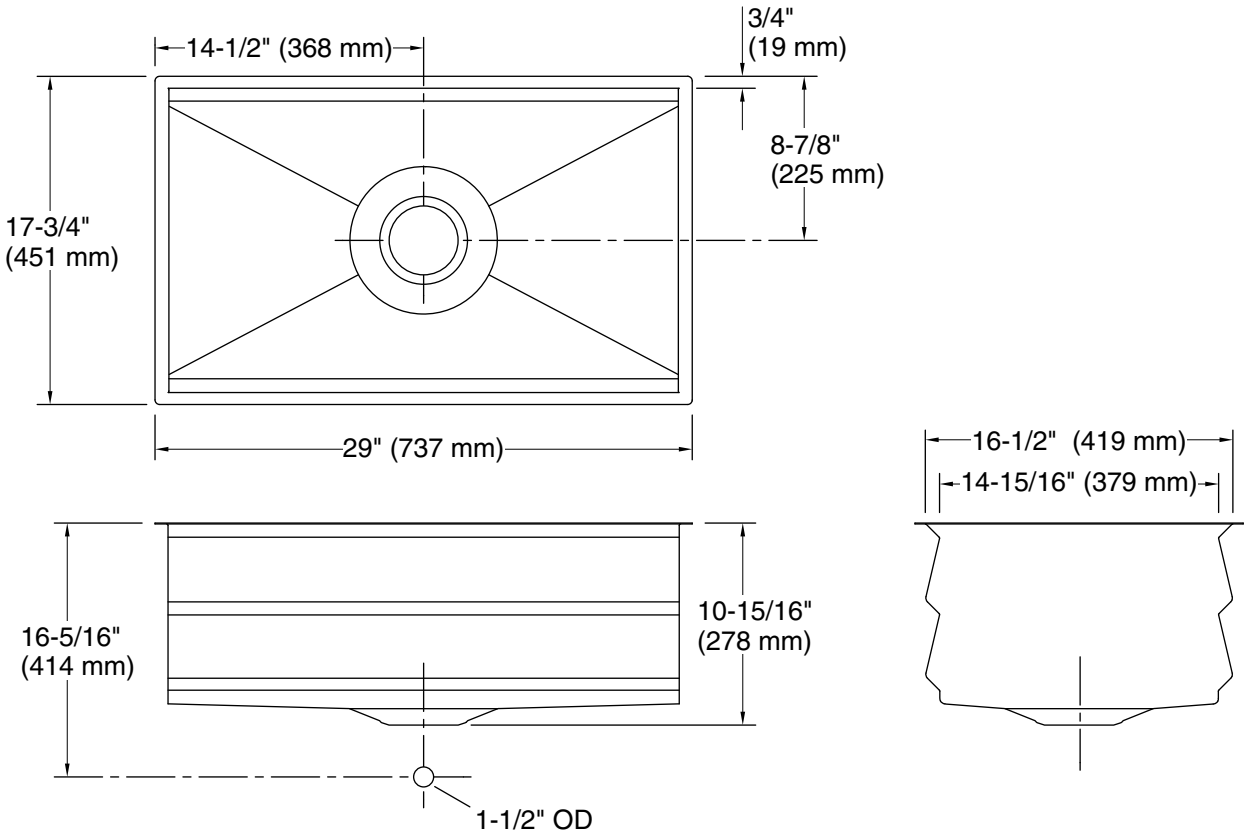

Technical Information

All product dimensions are nominal.

Installation:	Undermount
Min. base cabinet width:	33" (838 mm)
Bowl area (Only):	Length: 27-1/2" (699 mm) Width: 14-15/16" (379 mm) Bowl depth: 10" (253 mm) Water depth: 10" (253 mm)
Drain hole:	3-3/4" (94 mm)
Template:	1311446-7, required, included

Notes

Install this product according to the installation instructions.

Countertop manufacturer or cutter must use the cut-out template provided with the product, or a current one provided by Kohler Co. (call 1-800-43-FOCUS). Kohler Co. is not responsible for cut-out errors when the incorrect cut-out template is used.