KOHLER. Faucets

30" slidebar
K-8524

Features

- 30" (762 mm) adjustable slidebar supports handshower at desired height for a customized showering experience.

Material

- Durable metal construction.
- KOHLER finishes resist corrosion and tarnishing.

Recommended Products/Accessories

1109083
1032501
1032502
1032503
K-23723 Faucet cleaner

ADA

Codes/Standards

ASME A112.18.1/CSA B125.1
ADA
ICC/ANSI A117.1

KOHLER® Faucet Lifetime Limited Warranty

See website for detailed warranty information.

Available Colors/Finishes

Color tiles intended for reference only.

Color	Code	Description
	CP	Polished Chrome
	SN	Vibrant® Polished Nickel
	AF	Vibrant® French Gold
	PB	Vibrant® Polished Brass
	BN	Vibrant® Brushed Nickel
	BV	Vibrant® Brushed Bronze
	2BZ	Oil-Rubbed Bronze
	BL	Matte Black
	2MB	Vibrant® Brushed Moderne Brass
	RGD	Vibrant Rose Gold
	TT	Vibrant Titanium
	VHR	

KOHLER Faucets

30" slidebar
K-8524

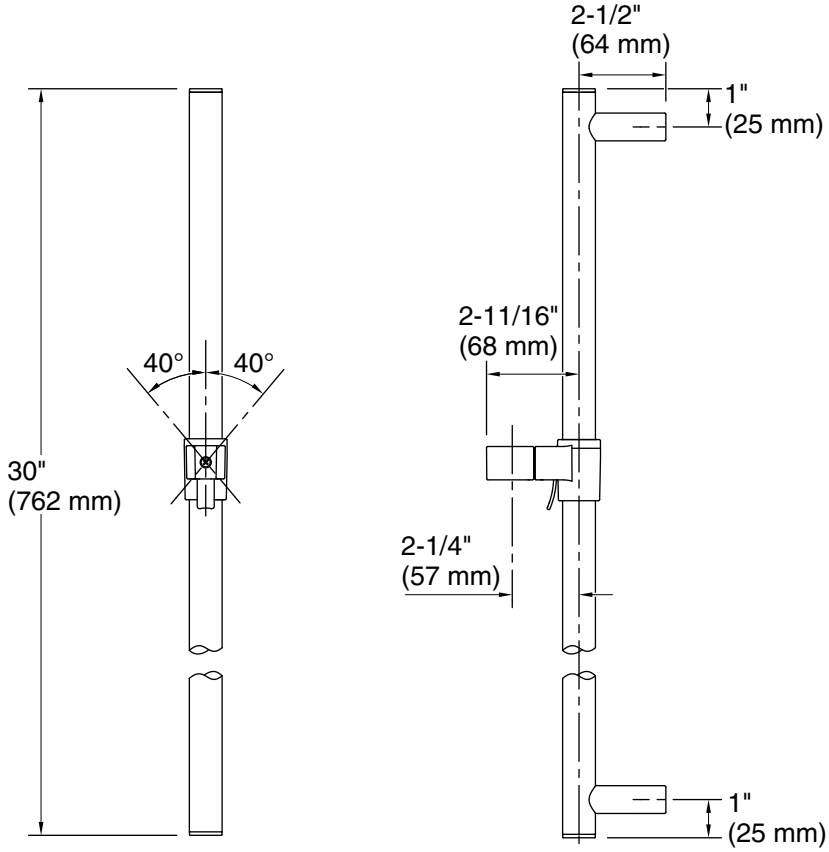

Technical Information
All product dimensions are nominal.

Notes
Install this product according to the installation guide.

ADA compliant when installed to the specific requirements of these regulations.